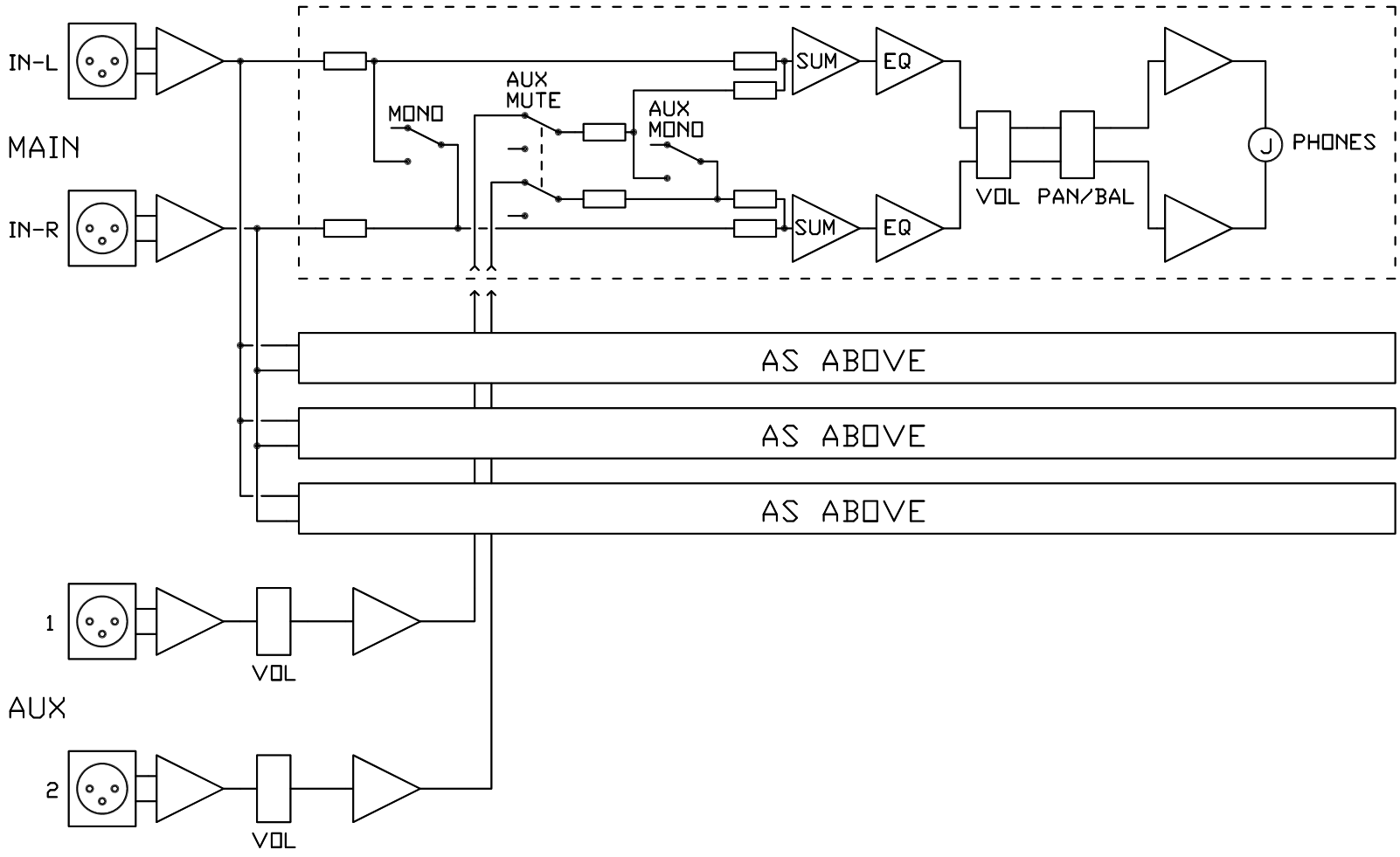

ELBERG LYD-TEKNIK www.elberg-elt.dk +45 44 99 26 99	Designed by: ELBERG File: HP4BL	Date/revision: 210928/1	Setting: IMP25	Title: HEADPHONE AMP